Electronics Documentation

1. Electronics Block Diagram

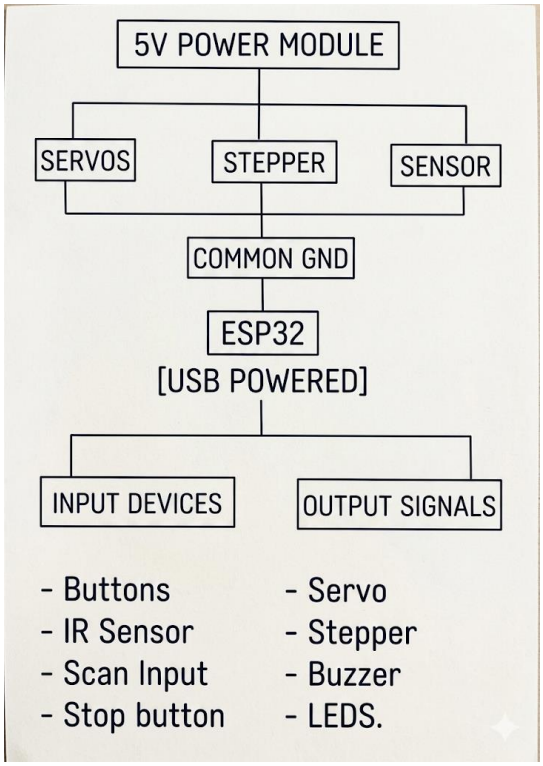

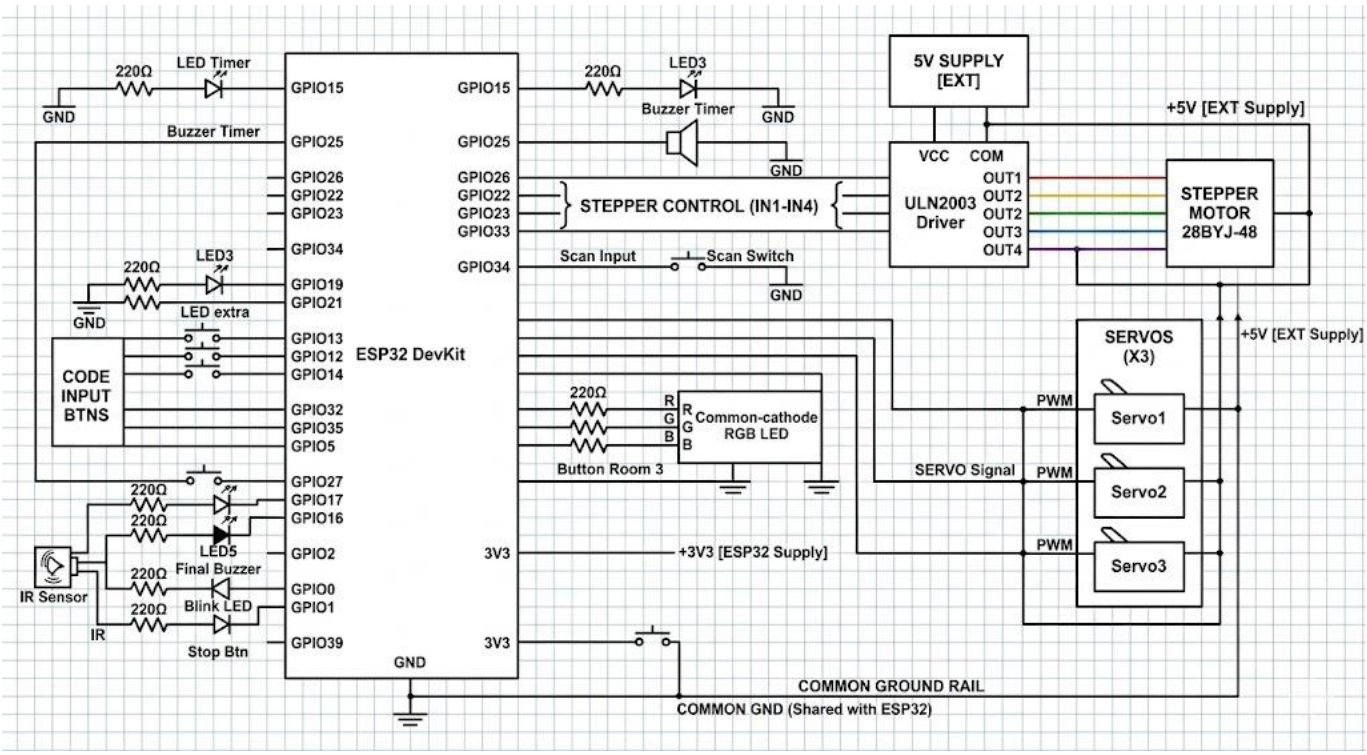

2. Components Table

Component	Quantity	Purpose	Justification
ESP32 Microcontroller	1	Controls the entire escape room logic (inputs, outputs, game states, timing).	ESP32 supports Micro Python, multiple GPIO pins, PWM (for servos), and multitasking, making it ideal for handling a multi-room interactive system.
Stepper Motor (with Driver)	1	Acts as a visual countdown timer (clock mechanism) in Room 1.	A stepper motor provides precise, continuous rotational movement, which is perfect for representing time visually (unlike DC motors which lack control).
Servo Motors	3	**Servo 1:** Opens puzzle after correct button sequence **Servo 2:** opens door 1 (exit from room 1) **Servo 3:** Final door / system reveal	**Servo 1:** Precise angle control for revealing hidden elements **Servo 2:** Allows controlled movement **Servo 3:** Allows controlled movement

Push Buttons	5	• 3 → Code input (Room 2 sequence puzzle) • 1 → Room 3 trigger button • 1 → Final stop/reset button **Purpose:** User interaction and puzzle solving	reliable digital input; perfect for user-driven gameplay decisions
IR Sensor (Infrared Sensor)	1	Detects a particular action of the player in a puzzle in room 2	Enables contactless interaction, enhancing immersion in the escape room
LEDs	7	• Clue led (led to display message on Lazer cut board through butter paper)- 5 • Match the wire led –1 • Detonate board- 1 **Purpose:** Visual feedback, clues, and instructions	LEDs are essential for guiding the player non-verbally and enhancing storytelling
Buzzer	2	• 1 → Timer buzzer (every 2 minutes) • 1 → Final alarm buzzer **Purpose:** Audio feedback and tension building	Sound adds urgency and improves game immersion and pacing

Power Supply (5V / Battery Pack)	1	Powers ESP32, motors, and components	Stable power is required for consistent motor and sensor performance
Led strip	1	To light up the rooms	LED strips provide continuous and even illumination, unlike single LEDs which create point of light.

Justification is important